Flat Suction Cups SAOF HT2 (Oval)

Suction area (LxW) from 60 x 23 mm to 100 x 50 mm

METAL

Flat Suction Cups SAOF HT2 (Oval)

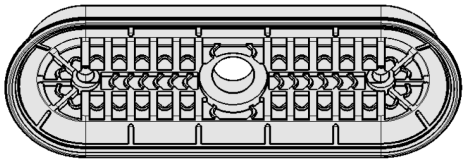

System design Flat Suction Cups SAOF HT2 (Oval)

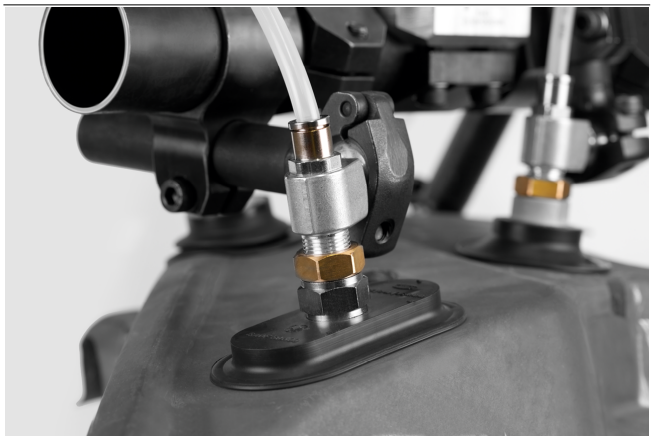

Flat suction cups SAOF HT2 being used for handling formed sheet metal parts

Suitability for industry specific applications

Application

- Oval flat suction cup for dynamic handling of hot metal sheets up to 250 °C
- Unloading of elongated workpieces after forming, e.g. reinforced ribs and plates
- Handling of thin aluminum sheets without deformation or deep drawing
- For use e.g. in feeder systems for press lines in the automotive industry

Design

- Robust and wear-resistant oval flat suction cup SAOF made of HT2 with single sealing lip and inner support
- Connection nipple glued to the reinforcing element of the suction cup (very high strength and temperature resistance)

Product highlights

- Silicone-free special material HT2 is free of LABS and temperature resistant up to 250 °C
- Large, structured inner support prevents deep drawing and withstands the highest lateral forces
- Soft, flexible sealing lip seals optimally, even on slight unevenness

© J. Schmalz GmbH / Reserve technical changes / generated on: 23.03.2025

Contact Schmalz: J. Schmalz GmbH, Johannes-Schmalz-Str. 1 • 72293 Glatten • +49 7443 2403-105 • kundencenter@schmalz.de

Flat Suction Cups SAOF HT2 (Oval)

Suction area (LxW) from 60 x 23 mm to 100 x 50 mm

Designation code Flat Suction Cups SAOF HT2 (Oval)

SAOF	–	80x40	–	HT2-65	–	G1/4-IG
1		2		3		4

1 – Abbreviated designation

Code	Version
SAOF	Flat, oval

2 – Suction area

Code	LxW in mm
60x23…100x50	60x23 to 100x50

3 – Material

Code	Material
HT2-65	High temperature material

4 – Connection

Code	Connection
G1/4-AG	G1/4-AG (AG = male (M))
G1/4-IG	G1/4-IG (IG = female (F))
G3/8-IG	G3/8-IG

Suction cup SAOF HT2, available in various dimensions, is delivered with connection nipple glued to elastomer part.

Ordering data Flat Suction Cups SAOF HT2 (Oval)

Type		Vacuum connection: G1/4-AG	G1/4-IG	G3/8-IG
SAOF	60x23	10.01.05.00743	10.01.05.00742	10.01.05.00741
SAOF	80x40	10.01.05.00751	10.01.05.00750	10.01.05.00749
SAOF	90x30	10.01.05.00747	10.01.05.00746	10.01.05.00745
SAOF	100x50	10.01.05.00755	10.01.05.00754	10.01.05.00753

Technical data Flat Suction Cups SAOF HT2 (Oval)

Type		Suction force (-600 mbar) [N]*	Lateral force [N]**	Volume [cm³]	Workpiece radius min. (convex) [mm]	Hose inner diameter (recom.) d [mm]***
SAOF	60x23	57	36	3.9	20	4
SAOF	80x40	140	108	11.7	50	4
SAOF	90x30	122	94	7.0	40	4
SAOF	100x50	217	177	21.8	75	6

*The specified suction forces are theoretical values at a vacuum of -0.6 bar and with a smooth, dry workpiece surface - they do not include a safety factor

**The specified lateral forces are values measured at a vacuum of -0.6 bar with a dry, smooth, flat workpiece surface. Depending on the workpiece surface and its quality, the actual values may deviate from these values.

***The recommended hose diameter is based on a hose length of approx. 2 m

Contact Schmalz: J. Schmalz GmbH, Johannes-Schmalz-Str. 1 • 72293 Glatten • +49 7443 2403-105 • kundencenter@schmalz.de

Flat Suction Cups SAOF HT2 (Oval)

Suction area (LxW) from 60 x 23 mm to 100 x 50 mm

Design data Flat Suction Cups SAOF HT2 (Oval)

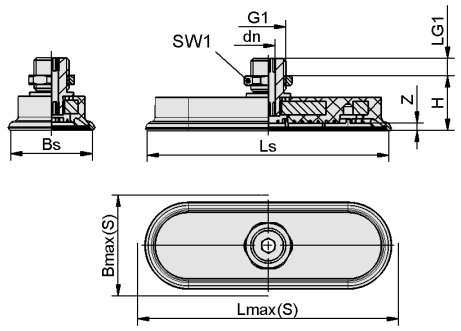

SAOF HT2 AG

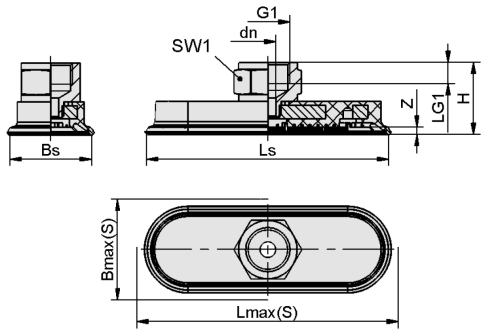

SAOF HT2 IG

Contact Schmalz: J. Schmalz GmbH, Johannes-Schmalz-Str. 1 • 72293 Glatten • +49 7443 2403-105 • kundencenter@schmalz.de

Flat Suction Cups SAOF HT2 (Oval)

Suction area (LxW) from 60 x 23 mm to 100 x 50 mm

Design data Flat Suction Cups SAOF HT2 (Oval)

Type*	Bmax(S) [mm]**	Bs [mm]	dn [mm]	G1	H [mm]	LG1 [mm]	Lmax.(S) [mm]***	Ls [mm]	SW1 [mm]	Z (Stroke) [mm]
SAOF 60x23 HT2-65 G1/4-AG	25	22	5.0	G1/4"-M	18.0	8	64	61	17	3
SAOF 60x23 HT2-65 G1/4-IG	25	22	6.0	G1/4"-F	26.0	8	64	61	17	3
SAOF 60x23 HT2-65 G3/8-IG	25	22	6.0	G3/8"-F	26.0	8	64	61	22	3
SAOF 80x40 HT2-65 G1/4-AG	43	39	5.0	G1/4"-M	20.0	8	85	81	17	4
SAOF 80x40 HT2-65 G1/4-IG	43	39	6.0	G1/4"-F	28.0	8	85	81	17	4
SAOF 80x40 HT2-65 G3/8-IG	43	39	6.0	G3/8"-F	28.0	9	85	81	22	4
SAOF 90x30 HT2-65 G1/4-AG	34	31	5.0	G1/4"-M	19.0	8	94	91	17	3
SAOF 90x30 HT2-65 G1/4-IG	34	31	6.0	G1/4"-F	26.0	8	94	91	17	3
SAOF 90x30 HT2-65 G3/8-IG	34	31	6.0	G3/8"-F	27.0	9	94	91	22	3
SAOF 100x50 HT2-65 G1/4-AG	54	49	6.0	G1/4"-M	22.0	8	106	102	17	5
SAOF 100x50 HT2-65 G1/4-IG	54	49	8.0	G1/4"-F	30.0	8	106	102	17	5
SAOF 100x50 HT2-65 G3/8-IG	54	49	8.0	G3/8"-F	30.5	9	106	102	22	5

*Acceptable dimensional tolerances for rubber parts concerning to DIN ISO 3302-1 E3
**External dimension of the suction cup when it is pressed against the workpiece by the vacuum
***External dimension of the suction cup when it is pressed against the workpiece by the vacuum

Contact Schmalz: J. Schmalz GmbH, Johannes-Schmalz-Str. 1 • 72293 Glatten • +49 7443 2403-105 • kundencenter@schmalz.de